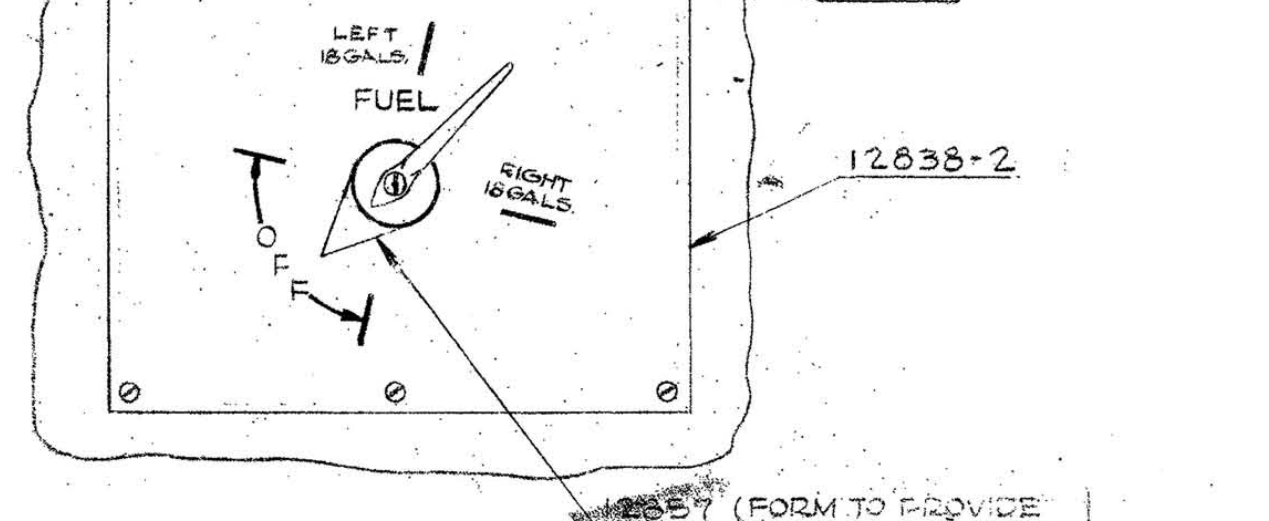
.082 HOLE
#4 P.K. SCREW
6 REQ.
LEFT 18 GALS.
FUEL
RIGHT 18 GALS.
OFF
12838-2
12857 (FORM TO PROVIDE 1/16 CLEARANCE WITH PLATE)

FIG. 5
FUEL VALVE PLATE INST.
6 IN. = 1 FT.

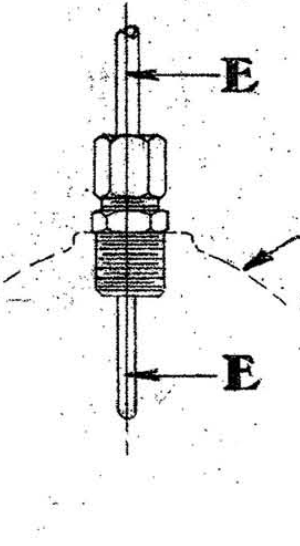
E
E
CYLINDER

FIG. 4
PRIMER LINE ATTACHMENT
TO CYLINDER
FULL SIZE

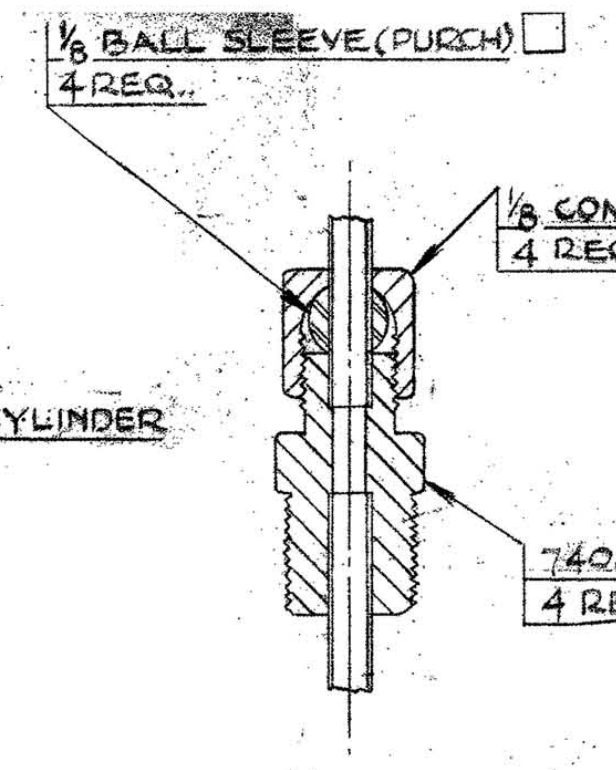
1/8 BALL SLEEVE (PURCH) □
4 REQ.
1/8 COMPRESSION NUT (PURCH) □
4 REQ.
74081 □
4 REQ.

SECTION E-E
TWICE SIZE

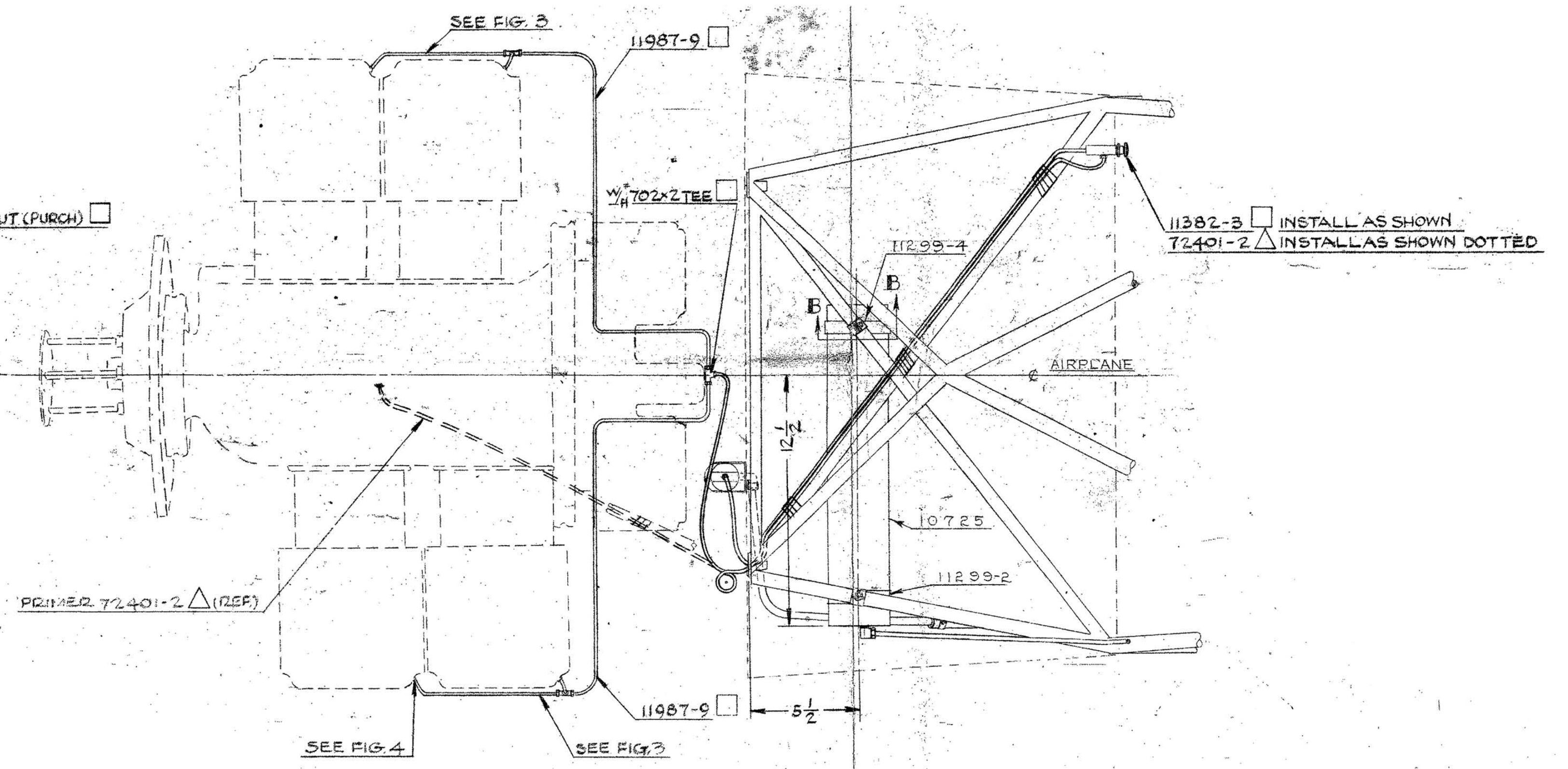
SEE FIG. 3
11987-9 □
W/H #702x2 TEE □
11382-3 □ INSTALL AS SHOWN
72401-2 △ INSTALL AS SHOWN DOTTED
11299-4
B
B
AIRPLANE ℄
12 1/2
10725
11299-2
PRIMER 72401-2 △ (REF)
11987-9 □
5 1/2
SEE FIG. 4
SEE FIG. 3

VIEW D-D

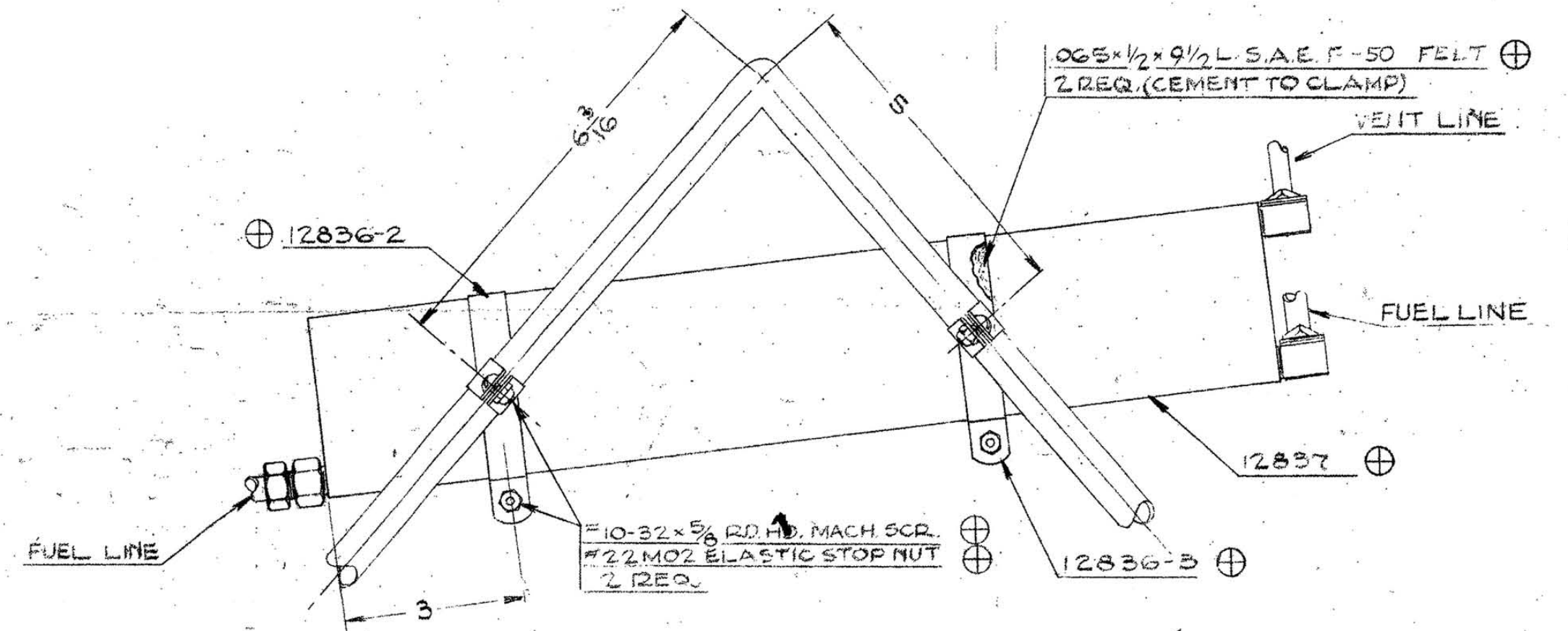
6 3/16
5
.065 x 1/2 x 9 1/2 L. S.A.E. F-50 FELT ⊕
2 REQ. (CEMENT TO CLAMP)
VENT LINE
⊕ 12836-2
FUEL LINE
12837 ⊕
FUEL LINE
#10-32 x 5/8 RD. HD. MACH. SCR. ⊕
#22 M02 ELASTIC STOP NUT ⊕
2 REQ.
12836-3 ⊕
3

VIEW C-C ⊕
6 IN. = 1 FT.

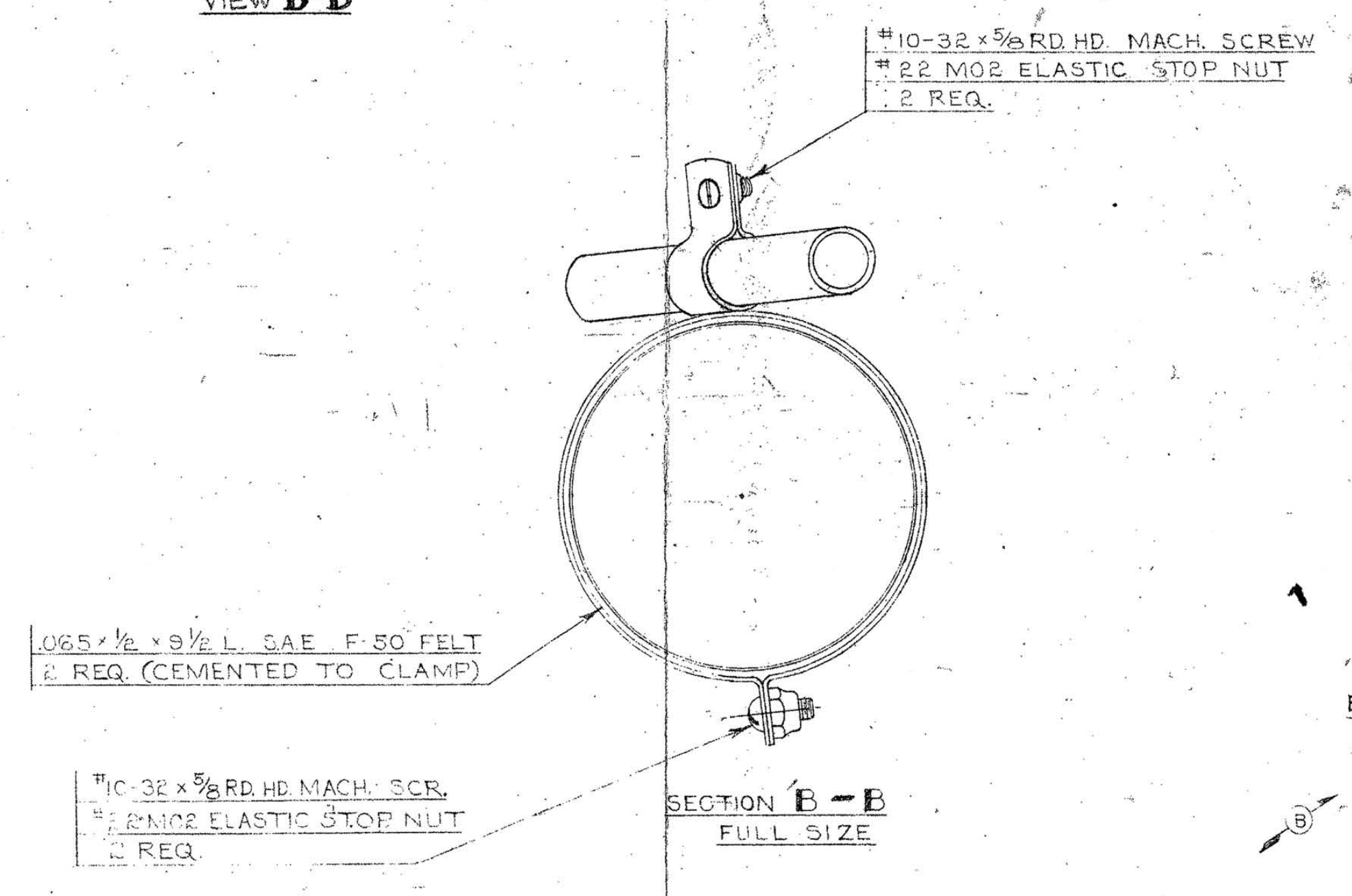
#10-32 x 5/8 RD. HD. MACH. SCREW
#22 M02 ELASTIC STOP NUT
2 REQ.
.065 x 1/2 x 9 1/2 L. S.A.E. F-50 FELT
2 REQ. (CEMENTED TO CLAMP)
#10-32 x 5/8 RD. HD. MACH. SCR.
#22 M02 ELASTIC STOP NUT
2 REQ.

SECTION B-B
FULL SIZE

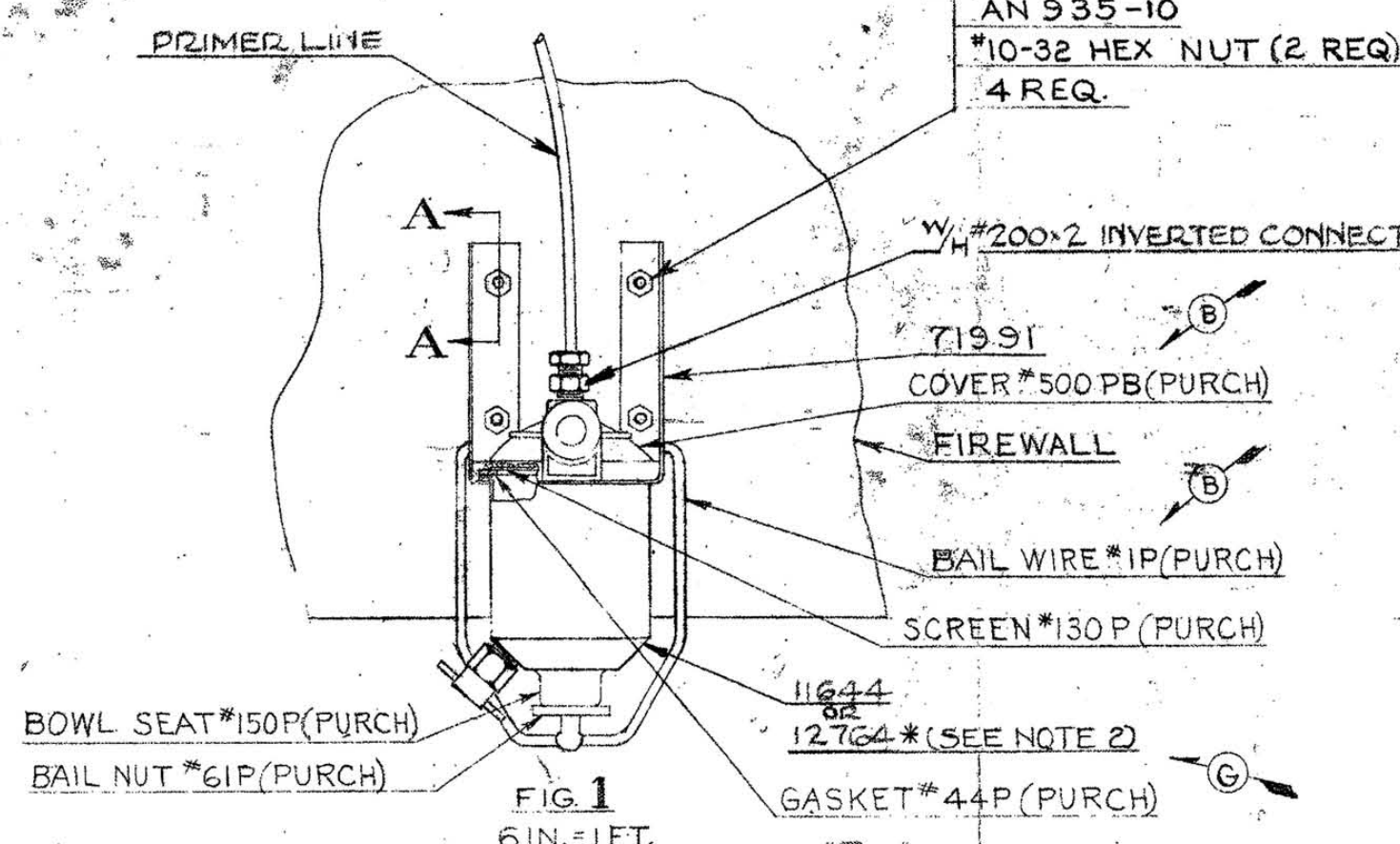
PRIMER LINE
#10-32 x 5/8 L. RD. HD. MACH. SCR.
AN 960-10
AN 935-10
#10-32 HEX NUT (2 REQ)
4 REQ.
A
A
W/H #200x2 INVERTED CONNECTOR
71991
COVER #500 PB (PURCH)
FIREWALL
BAIL WIRE #1P (PURCH)
SCREEN #130 P (PURCH)
11644 OR 12764 * (SEE NOTE 2)
BOWL SEAT #150 P (PURCH)
BAIL NUT #61 P (PURCH)
GASKET #44 P (PURCH)

FIG. 1
6 IN. = 1 FT.
FUEL STRAINER INSTALLATION

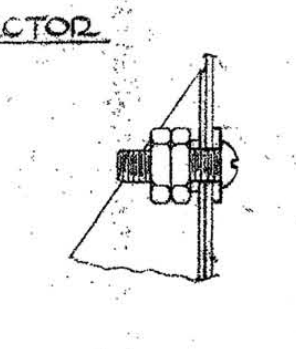

SECTION A-A
FULL SIZE

TAPE, SHELLAC & SAFETY WIRE
TEE TO BRACKET

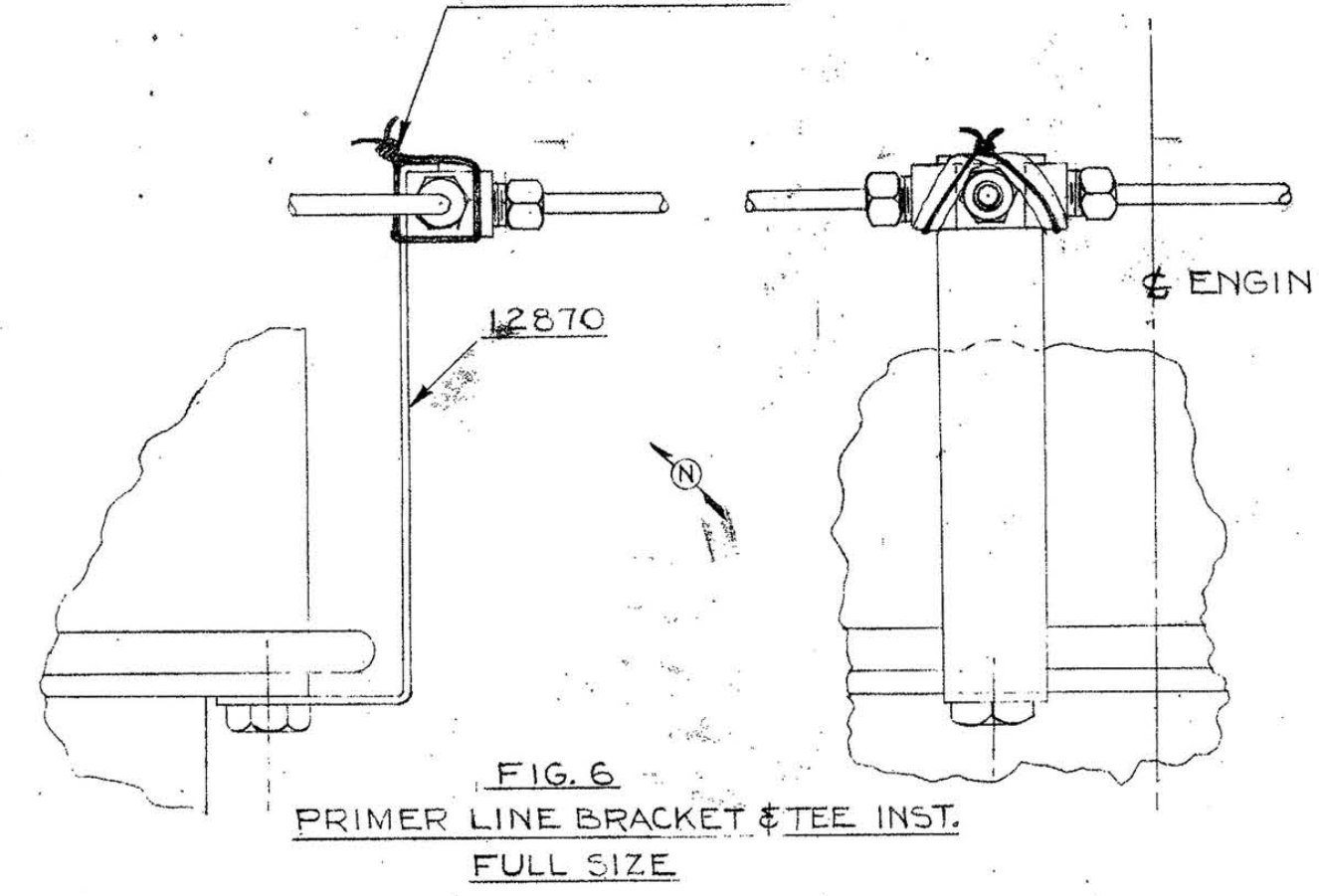
12870
℄ ENGINE

FIG. 6
PRIMER LINE BRACKET & TEE INST.
FULL SIZE

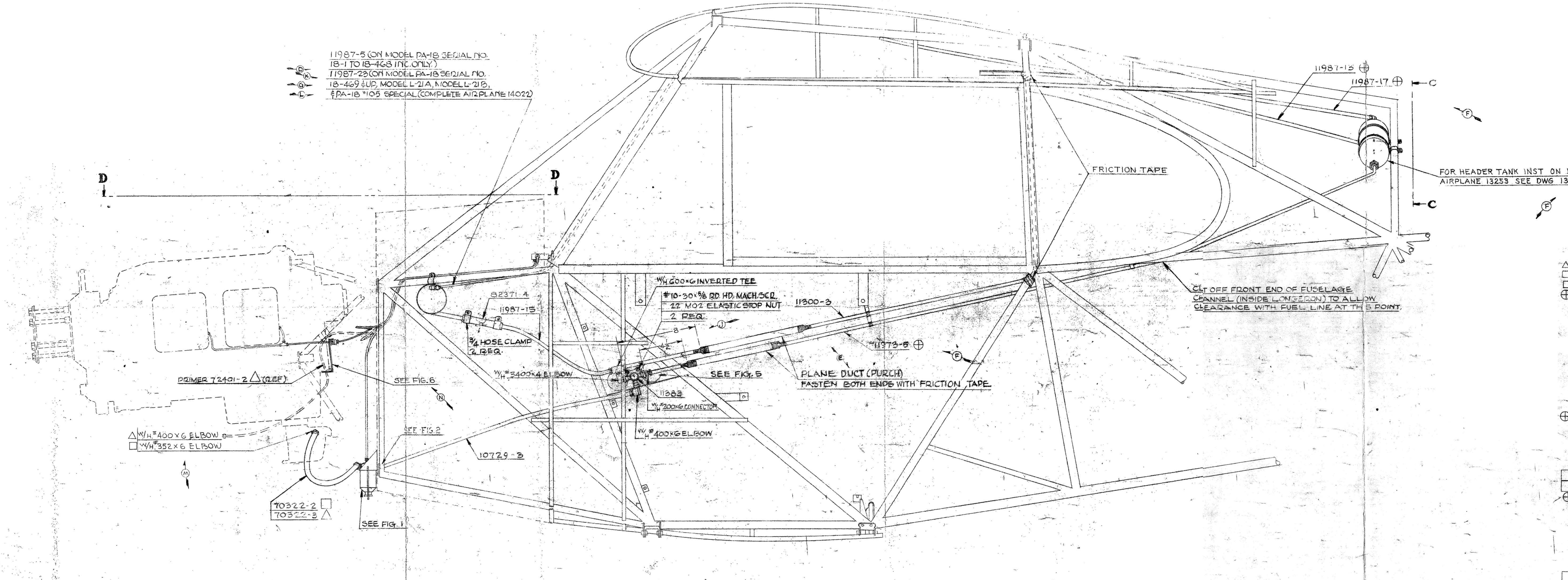
11987-5 (ON MODEL PA-18 SERIAL NO. 18-1 TO 18-468 INC. ONLY)
11987-23 (ON MODEL PA-18 SERIAL NO. 18-469 & UP, MODEL L-21A, MODEL L-21B, & PA-18 "105" SPECIAL (COMPLETE AIRPLANE 14022)
D
D
FRICTION TAPE
11987-13 ⊕
11987-17 ⊕
C
C
FOR HEADER TANK INST. ON PA-18 COMPLETE AIRPLANE 13253 SEE DWG 13299.
CUT OFF FRONT END OF FUSELAGE CHANNEL (INSIDE LONGERON) TO ALLOW CLEARANCE WITH FUEL LINE AT THIS POINT.
W/H 600x6 INVERTED TEE
#10-30 x 5/8 RD. HD. MACH. SCR.
22 M02 ELASTIC STOP NUT
2 REQ.
82371-4
11987-15
3/4 HOSE CLAMP
2 REQ.
11300-3
8
4 1/2
11373-5 ⊕
PRIMER 72401-2 △ (REF)
SEE FIG. 6
W/H #3400x4 ELBOW
SEE FIG. 5
PLANE DUCT (PURCH)
FASTEN BOTH ENDS WITH FRICTION TAPE.
11383
W/H #200x6 CONNECTOR
W/H #400x6 ELBOW
△ W/H #400x6 ELBOW
□ W/H #352x6 ELBOW
SEE FIG. 2
10729-3
70322-2 □
70322-3 △
SEE FIG. 1

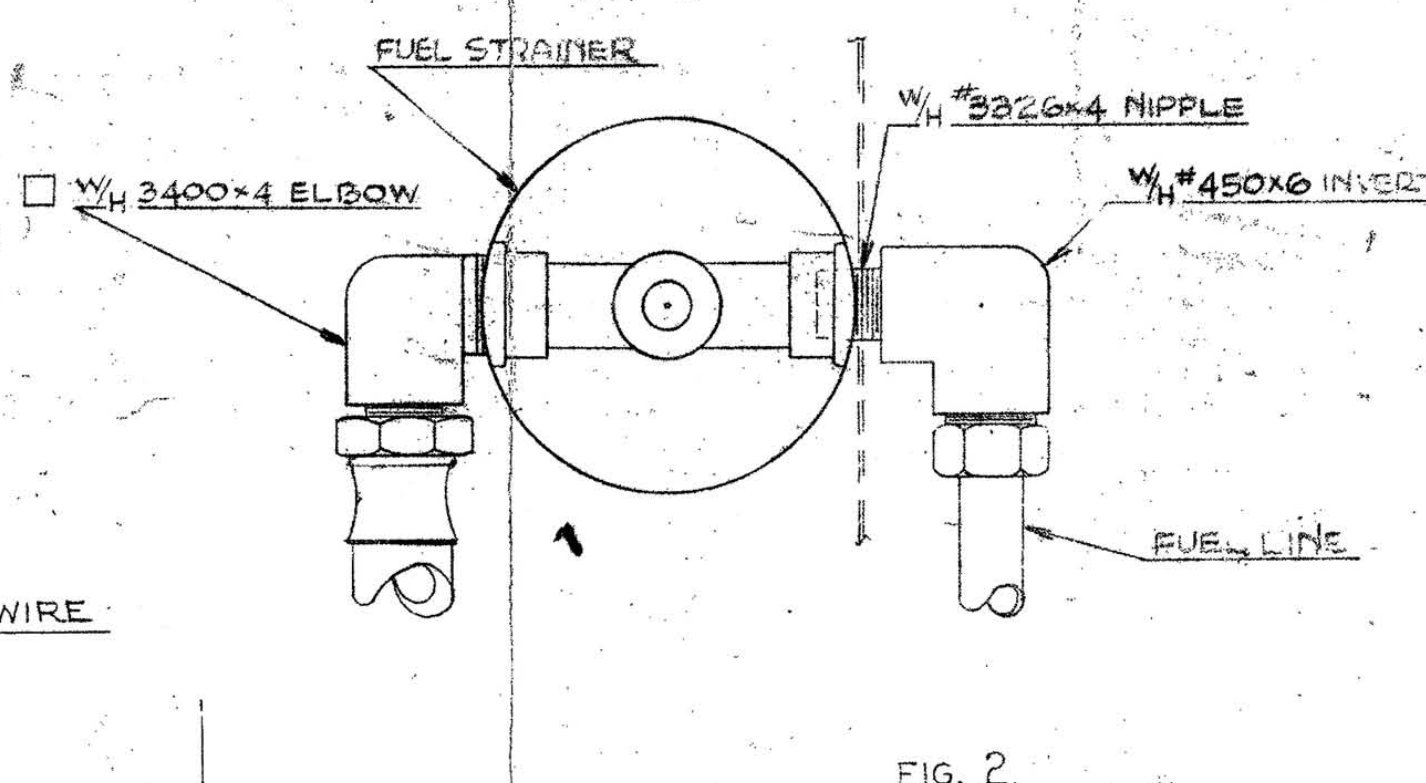
FUEL STRAINER
W/H #3326x4 NIPPLE
□ W/H 3400x4 ELBOW
W/H #450x6 INVERTED FEMALE ELBOW
FUEL LINE

FIG. 2
FUEL LINE TO STRAINER ATTACHMENT
FULL SIZE

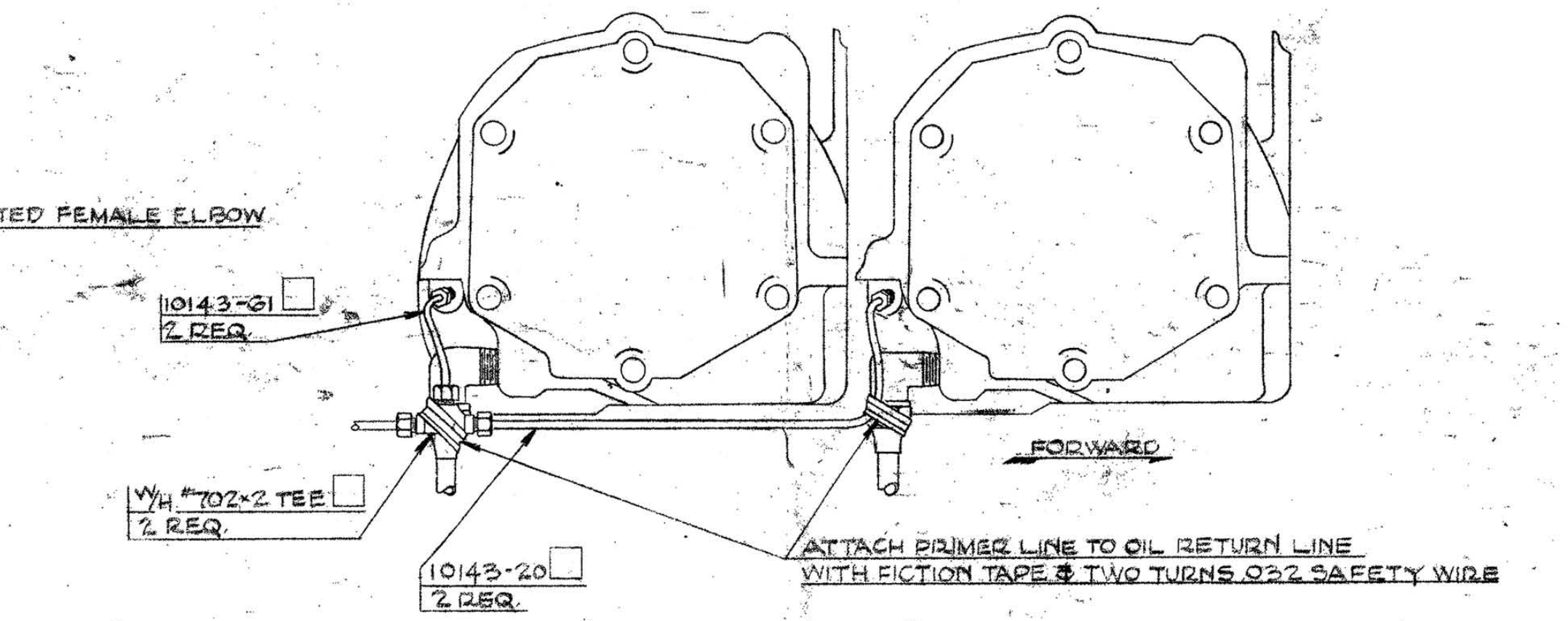
10143-61 □
2 REQ.
W/H #702x2 TEE □
2 REQ.
10143-20 □
2 REQ.
FORWARD
ATTACH PRIMER LINE TO OIL RETURN LINE
WITH FICTION TAPE & TWO TURNS .032 SAFETY WIRE

FIG. 3
PRIMER LINE ATTACHMENT AT CYLINDERS □
RIGHT SIDE OF ENGINE SHOWN
6 IN. = 1 FT.

NOTE:
1. TAPE FUEL LINES WITH FRICTION TAPE AT ALL POINTS WHERE CONTACTING METAL.
2. BOWL 12764 IS STANDARD ON MODEL L-21A, L-21B, PA-18 "135", PA-18A "135", & PA-18 "105" SPECIAL (COMPLETE AIRPLANE 14022 & OPTIONAL ON ALL OTHER MODELS.

□ USED ON MODELS PA-18, L-21A, PA-18 "105" SPECIAL (COMPLETE AIRPLANE 14022), & L-21B WITH LYCOMING O-235-C1, O-290-D, & O-290-D2 ENGINES ONLY.
△ USED ON MODEL PA-18 WITH CONTINENTAL C-90-8F & C90-12F ENGINE ONLY.
* OPTIONAL EQUIPMENT.
⊕ USED ON PA-18 COMPLETE AIRPLANE 12554, MODEL L-21A, MODEL L-21B & MODEL PA-18 "105" SPECIAL (COMPLETE AIRPLANE 14022) ONLY

	PART No.	No. REQ.	SIZE	DESCRIPTION	
	12870	1	BRACKET		
△		1	W/H #400x6	ELBOW	
□		1	W/H #352x6	ELBOW	
□		1	W/H #3400x4	ELBOW	
⊕	#10-32	4 10	5/8 L	RD. HD. MACH. SCR.	
	13299	1	HEADER TANK INST.	ON PA-18 COMPLETE AIRPLANE 13253 ONLY	
		2	1/2 I.D. x 10	PLANE DUCT TYPE SP	PURCH. GRAYBAR
		1	COVER #500PB	PURCH. KEM MFG. CO.	
		1	GASKET #44P		
		1	SCREEN #130P		
		1	BOWL SEAT #150P		
		1	BAIL NUT #61P		
		1	BAIL WIRE #1P		
⊕		2	.065 x 1/2 x 9 1/2	S.A.E. F-50 FELT	
		2	.065 x 1/2 x 9 1/2	S.A.E. F-50 FELT	
		1	3/4 x 96	FRICTION TAPE	
		2	3/4 HOSE CLAMP		
	11987-23	1	TUBE ASSY	ON PA-18 SERIAL NO. 18-469 & UP, L-21A, L-21B, & PA-18 "105" SPECIAL	
□		4	1/8 BALL SLEEVE #60	PURCH. COMMON WEALTH BRASS	
□		4	1/8 COMP. NUT #60		
⊕		4	#22 M02 E.S.N.		
		6	#22 M02 ELASTIC STOP NUT		
	#4	6	1/4 L	TYPE "A" STOVE HD. P.K. SCR.	
	#10-32	8	HEX NUT		
		1	.032 x 24	SAFETY WIRE	
	12857	1	POINTER		
		1	W/H #3400x4	ELBOW	
		1	W/H #3326x4	NIPPLE	
□		3	W/H #702x2	TEE	
		1	W/H #600x6	TEE	
		1	W/H #450x6	ELBOW	
		1	W/H #400x6	ELBOW	
		1	W/H #200x6	CONNECTOR	
		1	W/H #200x2		
	AN960-10	4	WASHER		
	AN935-10	4			
⊕	11987-17	1	TUBE ASS'Y		
	11383	1	VALVE ASS'Y		
	82371-4	1	HOSE		
□	74081	4	JET		
△	72401-2	1	PRIMER ASS'Y		
	71991	1	BRACKET ASS'Y		
△	70322-3	1	FUEL LINE ASS'Y		
□	70322-2	1			
	11987-15	1	TUBE ASSY		
⊕	11987-13	1			
□	11987-9	2			
	11987-5	1	TUBE ASSY	ON MODEL PA-18 SERIAL NO. 18-1 TO 18-468 INC. ONLY	
⊕	11973-5	1	FUEL LINE ASS'Y		
	12838-2	1	FUEL VALVE PLATE		
⊕	12837	1	HEADER TANK ASS'Y		
⊕	12836-3	1	CLAMP ASS'Y		
⊕	12836-2	1			
*	12764 OR 11644	1	BOWL (SEE NOTE 2)		
□	11382-3	1	PRIMER ASS'Y		
	11300-3	1	FUEL LINE ASS'Y		
	11299-4	1	CLAMP ASS'Y		
	11299-2	1			
	10729-3	1	FUEL LINE ASS'Y		
	10725	1	HEADER TANK ASS'Y		
□	10143-61	2	TUBE ASS'Y		
□	10143-20	2			
				MATERIAL	

SCALE 3 IN. = 1 FT. & NOTED | TOTAL WT.-LBS.
FINISH-PIPER SPECIFICATION #10
MANUFACTURING PRACTICES-PIPER SPECIFICATION #9

LET.	REVISION	DATE	BY
M	△ W/H #400x6 ELBOW & □ W/H #352x6 ELBOW, □ SYMBOL ADDED TO W/H 3400x4	12-11-52	I.M.M.
L	MODEL PA-18 "105" SPECIAL ADDED	9-25-52	M.G.
K	MODEL L-21B ADDED	8-11-52	I.M.M.
J	4 1/2 WAS 8 1/2, 8 WAS 12 & IN B/M. 10 WAS 9 FOR PLANE DUCT	5-29-52	I.M.K.
H	LYC. O-290-D2 ADDED TO □ NOTE	4-4-52	M.G.S.
G	NOTE 2 & MODEL L-21A ADDED	5-17-51	I.E.M.
F	13299 & CODE SYMBOL ⊕ ADDED	3-6-51	C.K.
E	PLANE DUCT ADDED	12-19-50	M.G.
D	11987-23 ADDED	9-11-50	K.D.
C	ADDITION TO CODE □	8-21-50	F.C.S.
B	GAS FILTER PART NOS. WAS ASSY. NO. 500P	4-25-50	C.K.
A	12857 ADDED	3-21-50	[illegible]

REVISION	DATE	BY
12870 & FIG. 6 ADDED	1-14-53	I.E.M.

MODEL	PER PLANE	NEXT ASSEMBLY	SUPERSEDES	SUP. BY

THIS DRAWING IS THE PROPERTY OF THE PIPER AIRCRAFT CORP. AND ITS POSSESSION BY UNAUTHORIZED PERSONS SHALL NOT BE CONSTRUED AS PERMISSION TO REPRODUCE FOR SALE, IN WHOLE OR IN PART, ANY DEVICES SHOWN THEREON.

PIPER AIRCRAFT CORP.
LOCK HAVEN, PENNA.

SYSTEM INSTALLATION - FUEL

DRAFTSMAN	CHECKER	STANDARDS
2-20-50	H.R.K. 2-27-50	

12458